10 Gbps Shuttle-to-Ground Adjunct Communications Link Capability Experiment

1999 Shuttle Small Payloads Project Office Symposium

Annapolis, MD

Dr. Gerry G. Ortiz

Outline

Introduction

- Free-space Optical Communication Overview
- Past Demos: GOLD and GOPEX
- ISS Optical Communications Demonstrator High Rat Link Facility (OCDHRLF) Experiment

Shuttle Hitchhiker C/B Carrier 10 Gbps Exp.

- Link Capability Enhancement
- Description of Experiment
- Modifications to OCD for H/H C/B Deployment

Summary

Free-Space Optical Comm.

- Uses single steering mirror and single tracking detector array to accomplish beacon acquisition, tracking, XMT/RCV co-alignment,and transmit-beam point-ahead
- Fiber-coupled laser transmitter removes heat from optics area
- NASA-patented “minimal-complexity” architecture

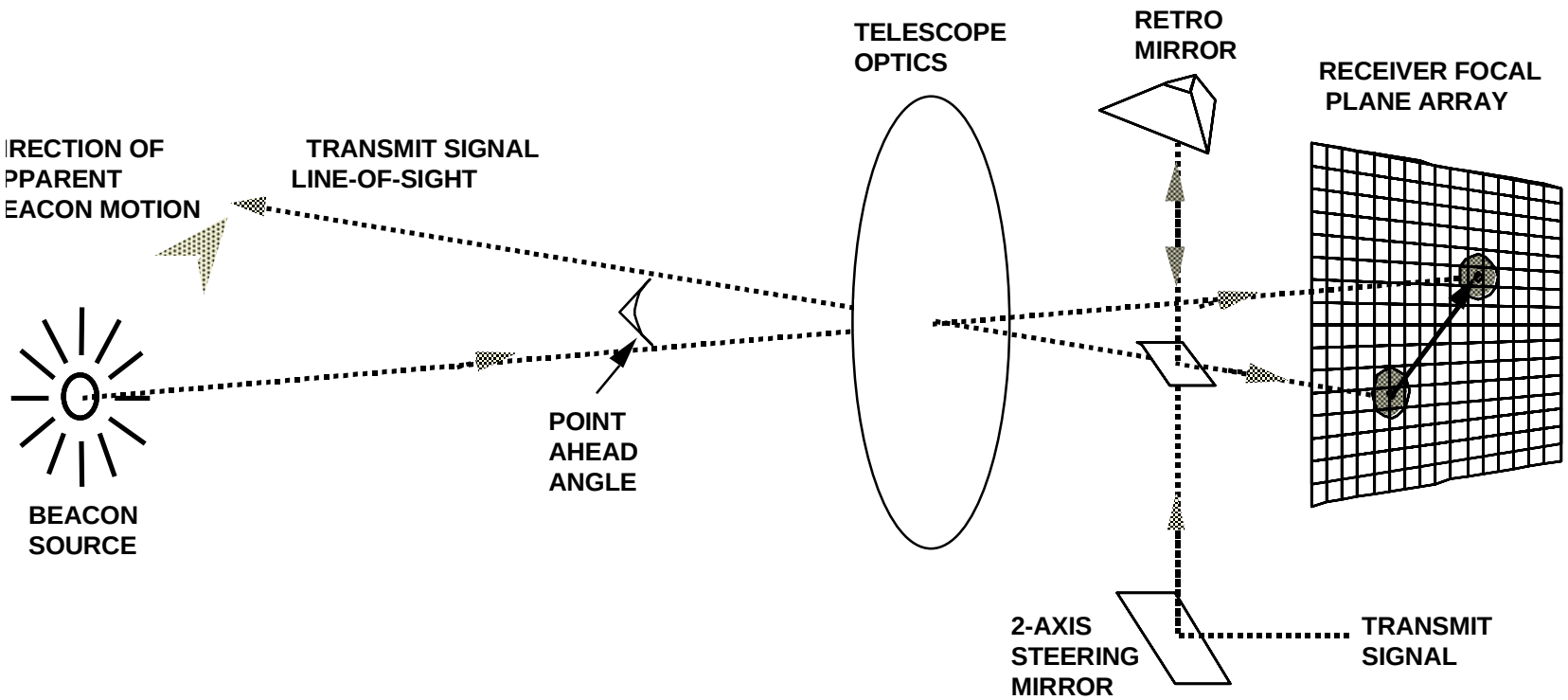

Lab Realization

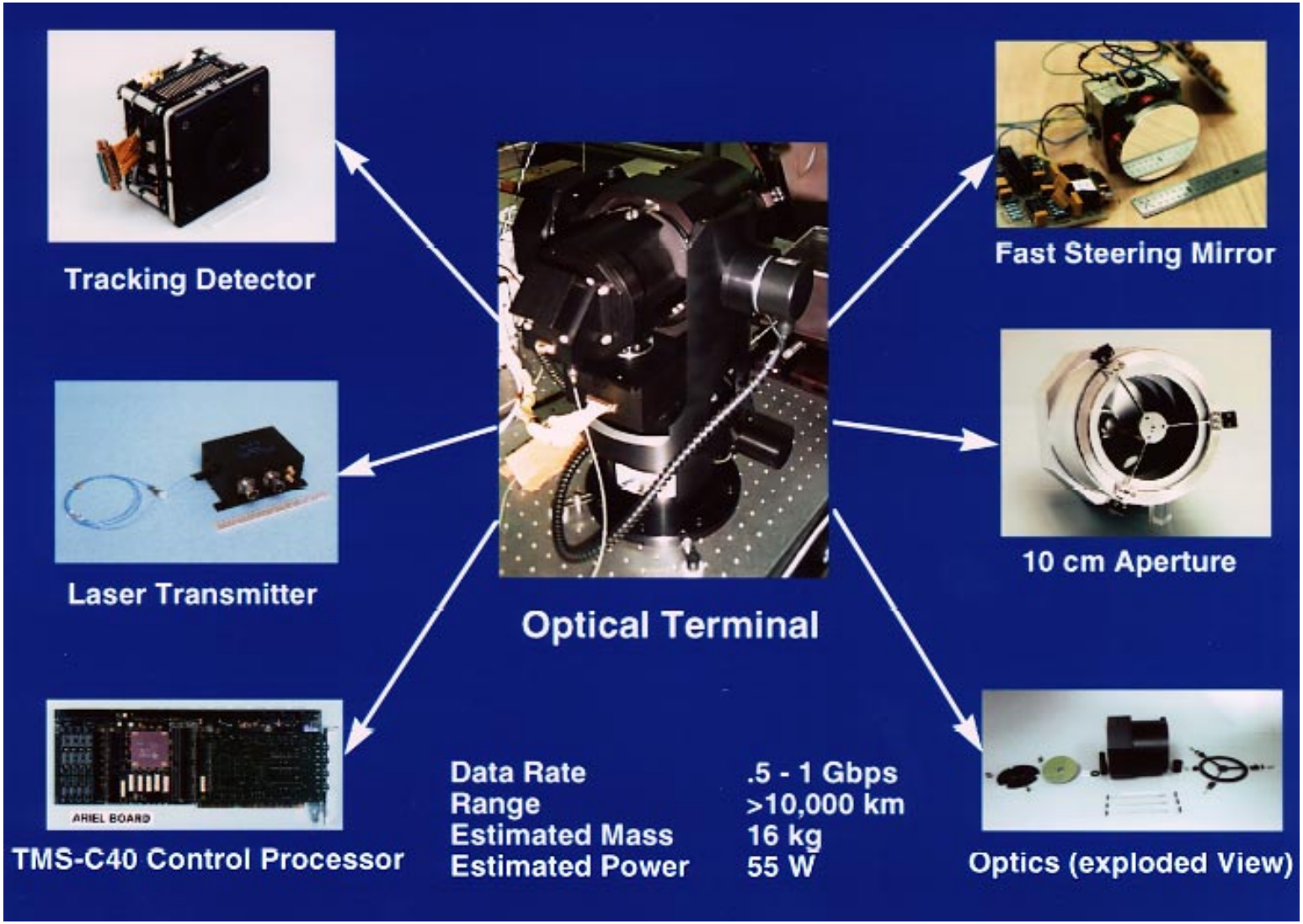

Past Opt. Comm. Demonstrations

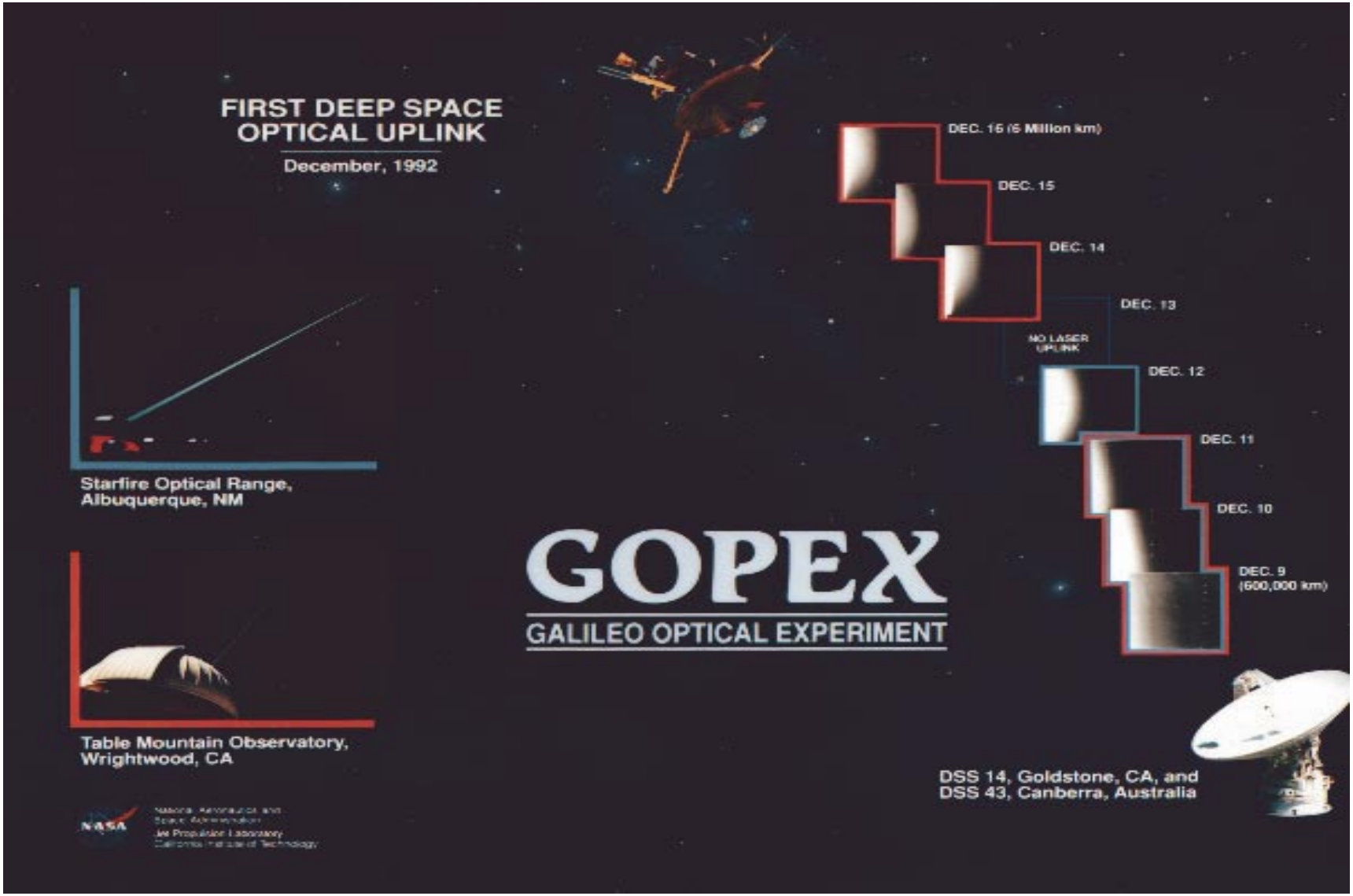

Past Opt. Comm. Demonstrations

GOLD Multiple-beam Transmission

Multiple beam uplink mitigates effects of atmospheric scintillation and beam wander

- **Beams are propagated through different atmospheric coherent cells**
- **Each beam is delayed relative to the other by greater than laser's coherence length**

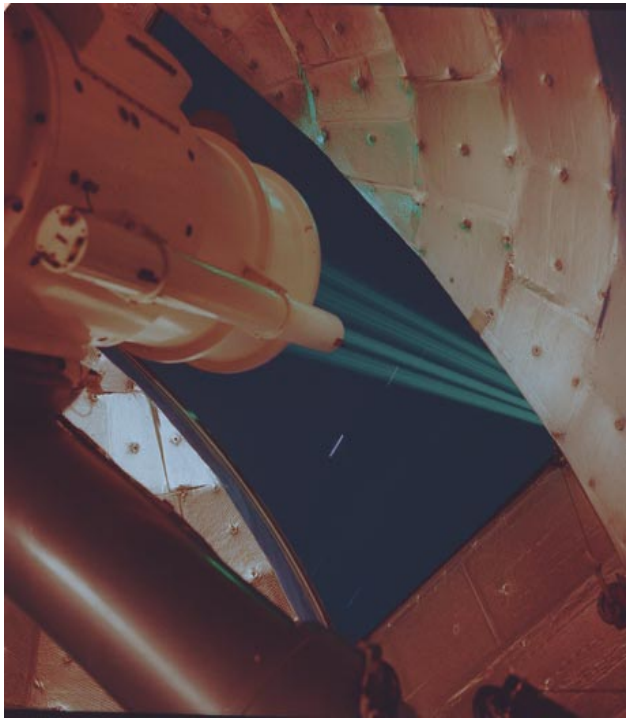

TMF 0.6-m Transmitter Telescope

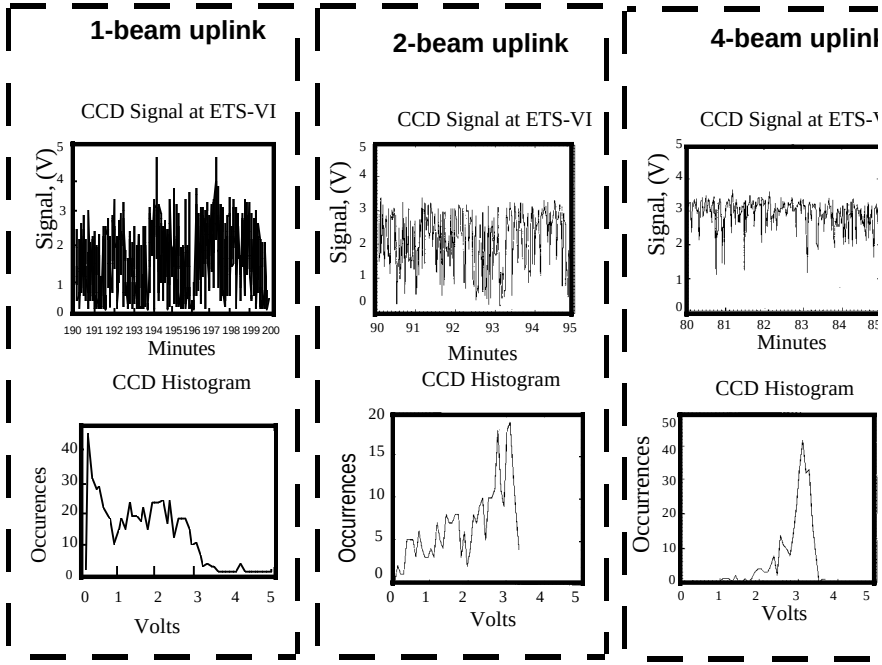

Ground Facility

- Optical Comm Telescope Laboratory (OCTL)
- Located at JPL's Table Mountain Facility
  - 2.4 km (7400 ft) elevation
- 1-m diameter aperture
- Fast (Earth-orbit) tracking mount
- Completion at end of 2000

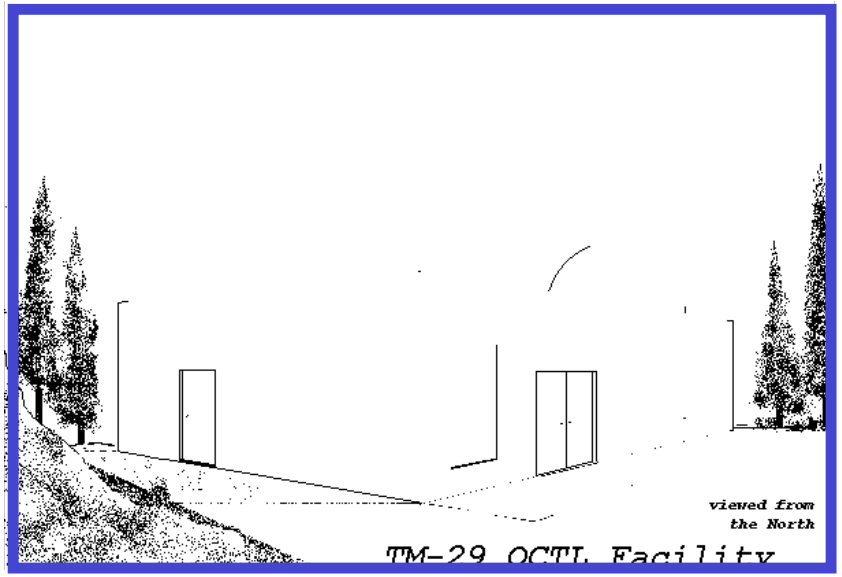

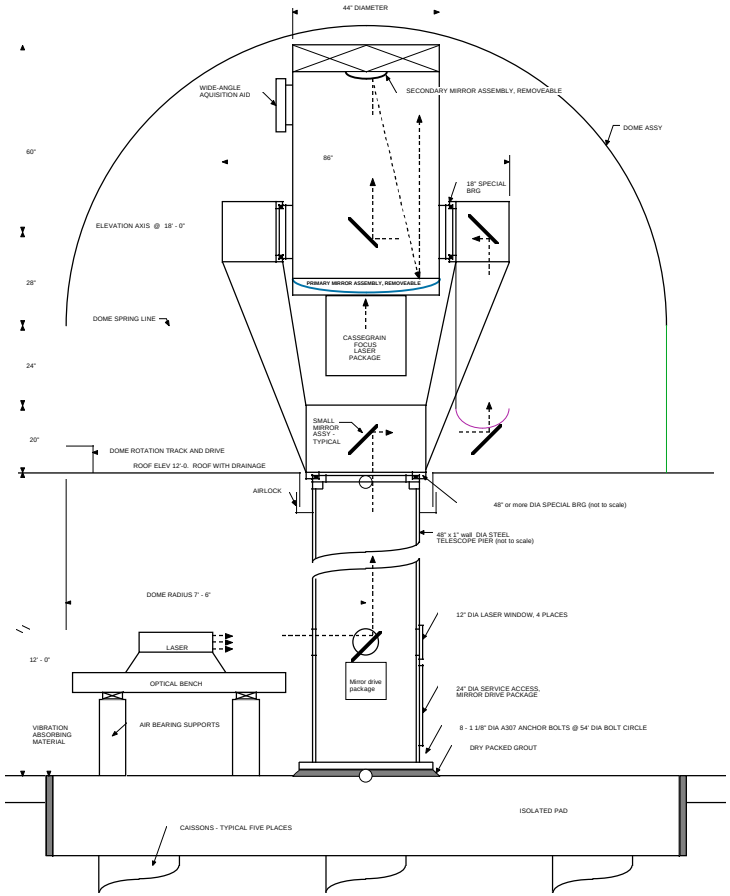

Figure 1a. Telescope Conceptual Drawing
(not to scale)

ISS OCDHRLF

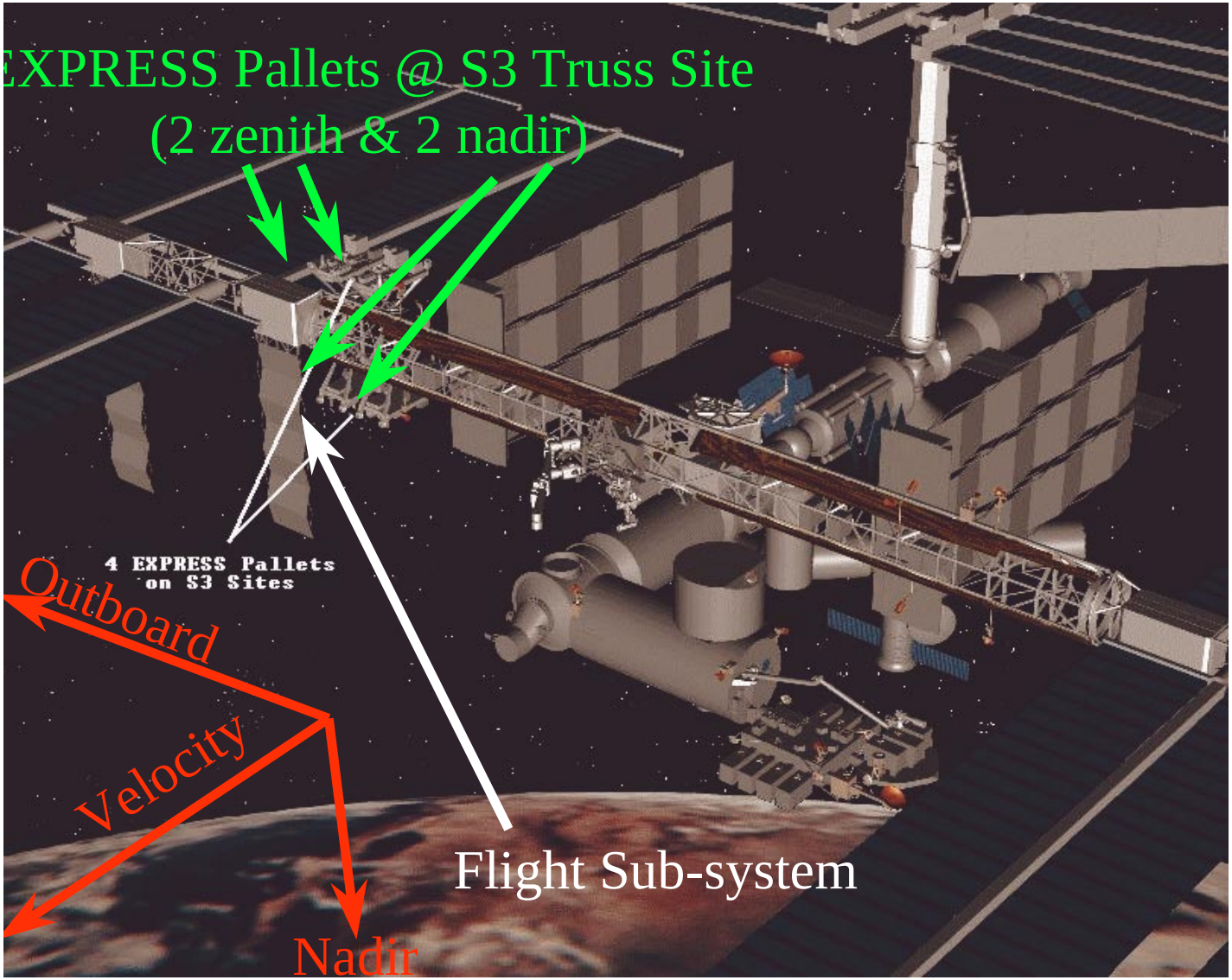

- 2.5 Gbp downlin
- Flight U
- Manifes for Feb

ISS OCDHRLF

- Optical Communications Demonstrator (OCD) installed in ISS for High Rate Link Facility
- Transmission at
  - 1550 nm laser
  - 200 mW Output
  - 2.5 Gbps

Flight Sub-system on ExPA

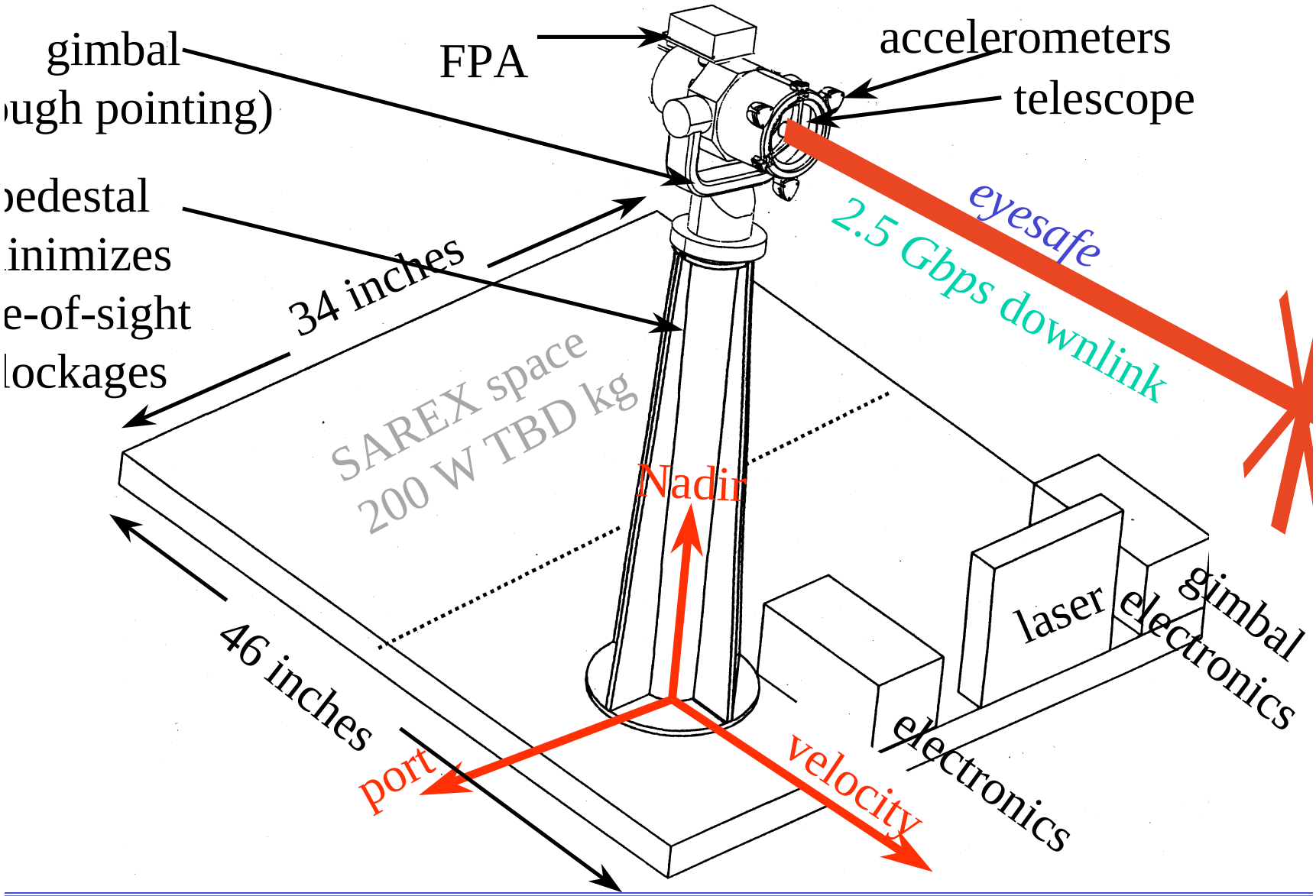

Shuttle H/H 10 Gbps Experiment

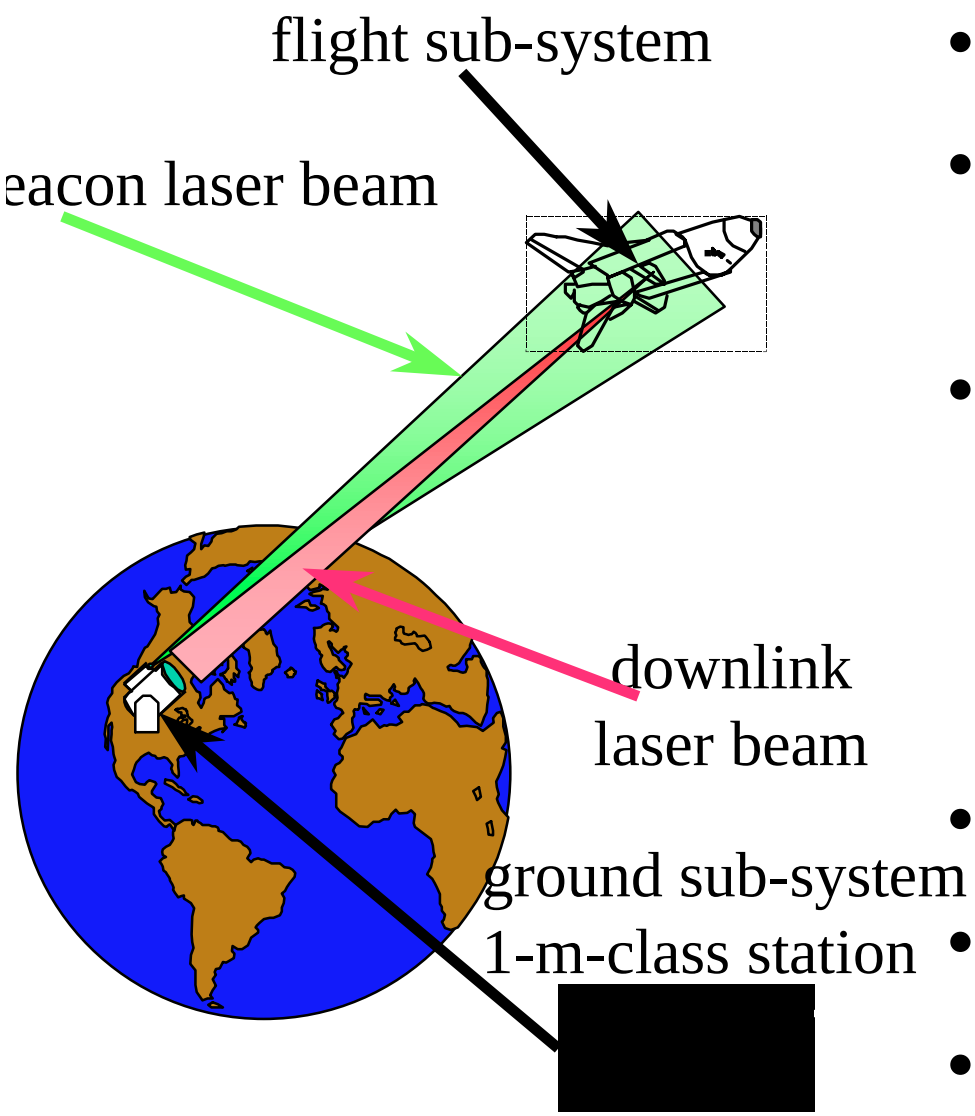

- 10 Gbps data rate
- OCD adapted to H/H C/B Carrier
- Enables real-time data delivery and increased data volume for payloads
- Precursor to NPOES
- Augments capability
- Proves technology

Shuttle H/H 10 Gbps Experiment

Flight Sub-system Modifications

- Laser Assembly: WDM Scheme and Power Level
- Interfaces
  - Mechanical
  - Electrical
  - Data
- Thermal Design

Ground Sub-system Modifications

- Detection Process: WDM Scheme

Transmitter Configuration

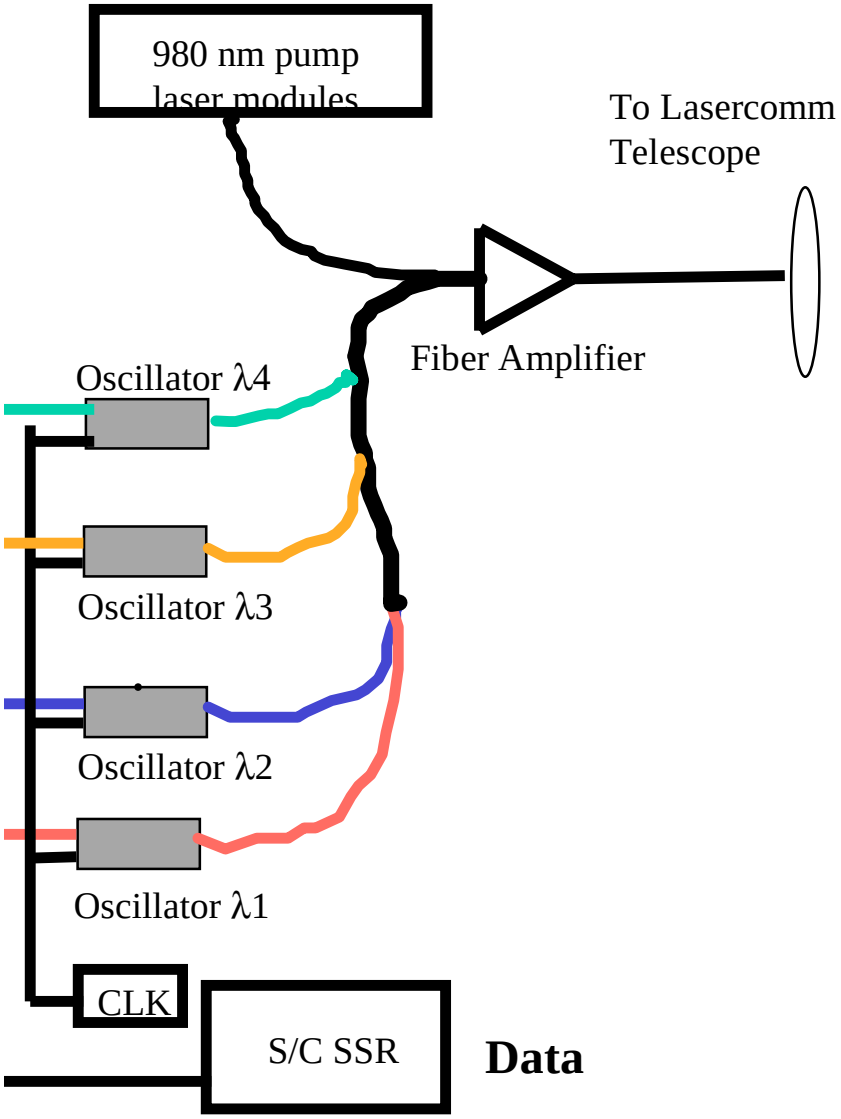

- Wavelength Division Multiplexing Scheme
  - Four laser oscillators
  - Each at 2.5 Gbps
  - Aggregate: 10 Gbps
- Fiber Amplifier
  - Power increased to 800 mV
- Changes only in the Laser Assembly

EXPRESS Pallet

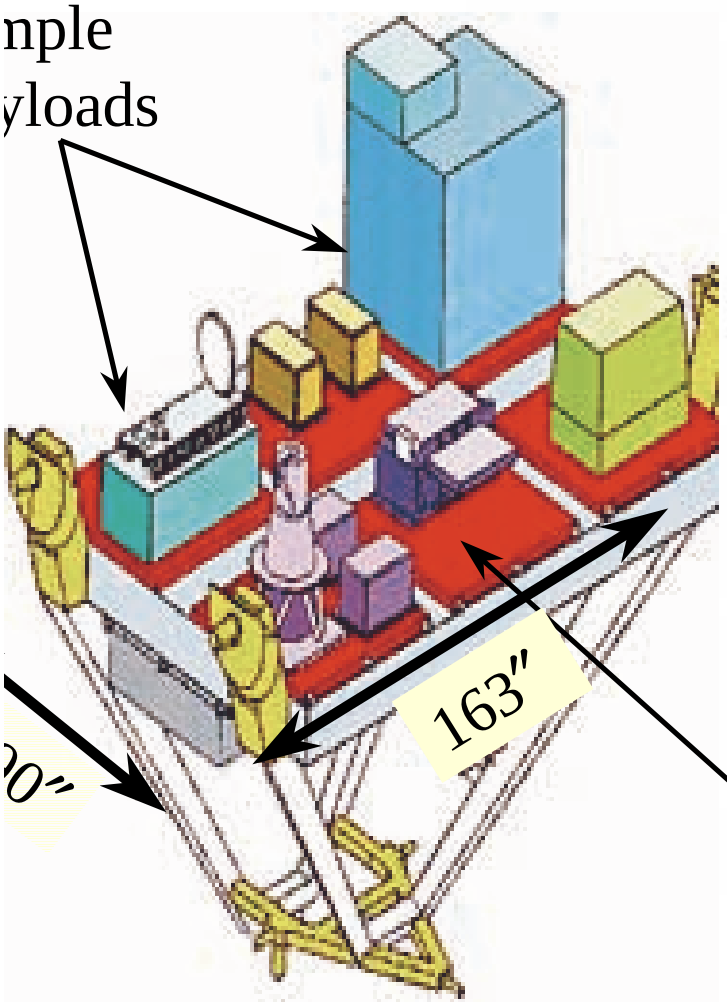

conceptual figure

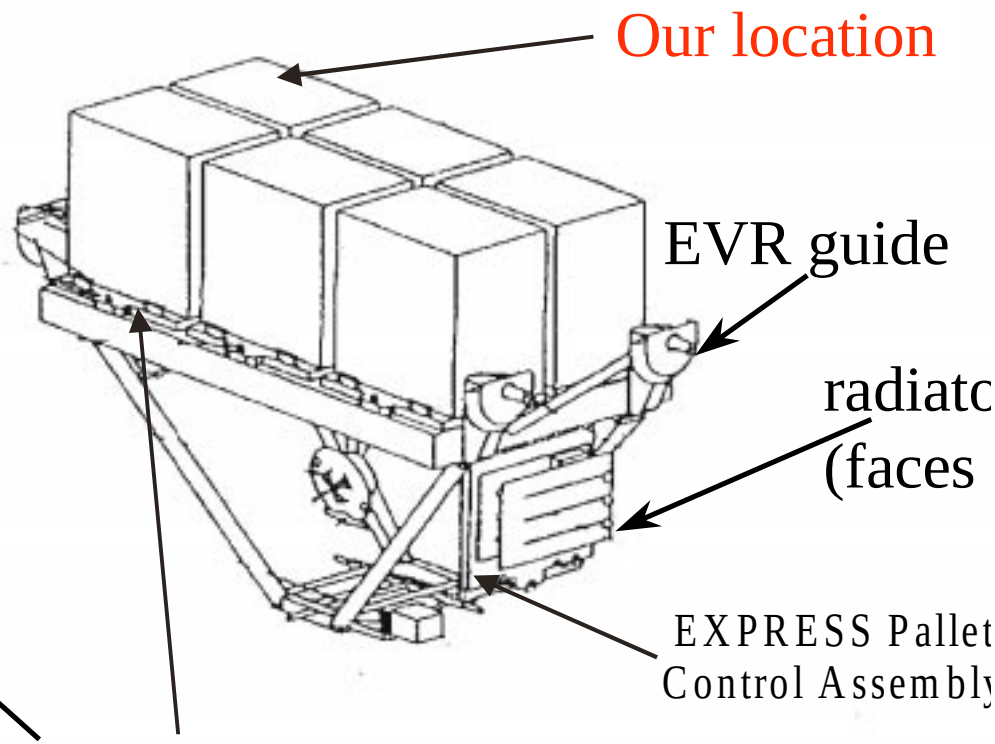

EXPRESS Pallet Adapter (ExPA)
(6 per EXPRESS Pallet)

mechanical drawing

EXPRESS Pallet in STS

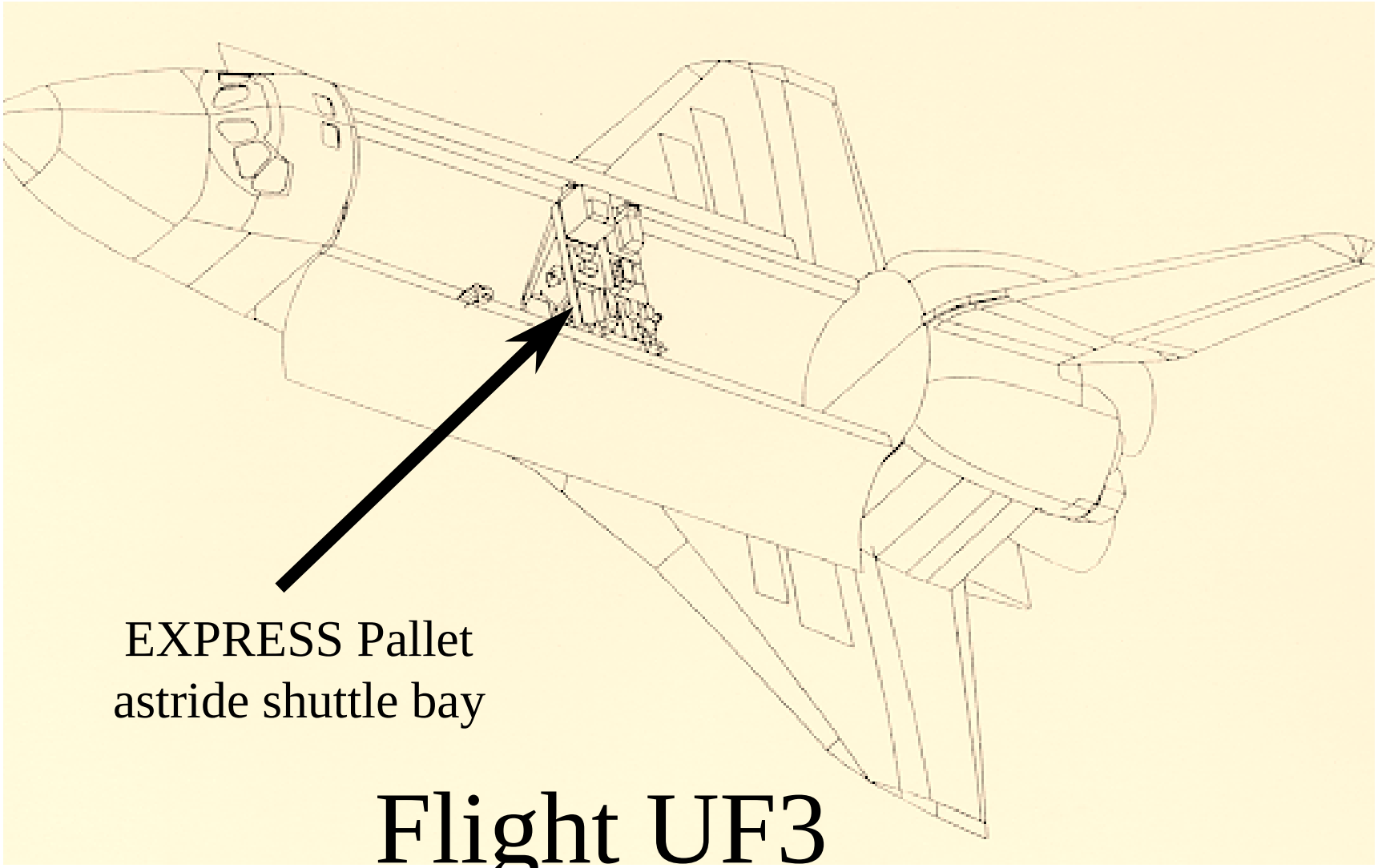

Flight UF3

Mechanical Interface

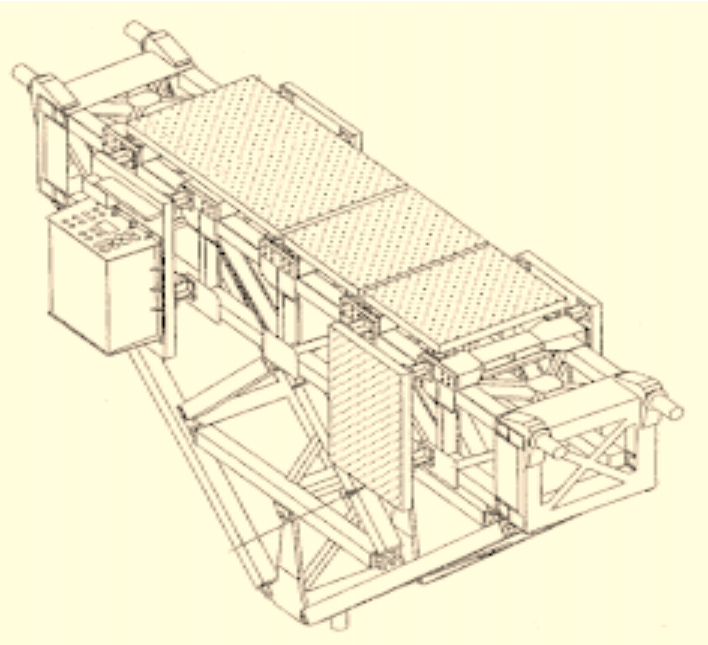

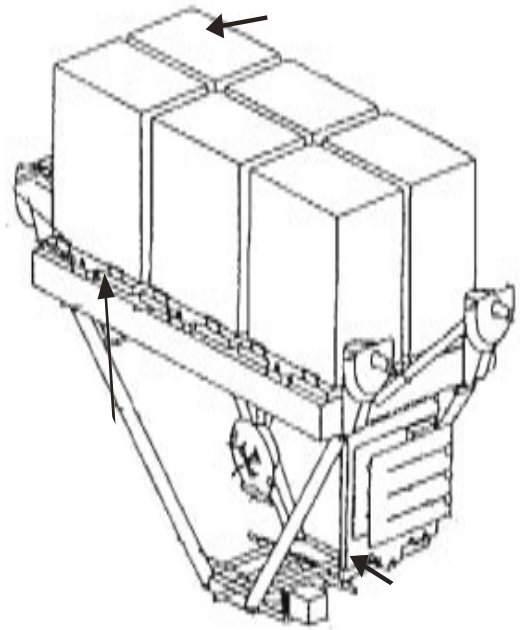

- H/H Single Pallet Capability
  - Payload to 272 kg
  - 83.8X139.7 cm
- ExPallet Capability
  - Payload to 227 kg
  - 86.4X116.8X124.5 cm
- Shuttle H/H 10 Gbps Experiment
  - Mass: 62 kg
  - 54x33x31 cm

Interfaces

Mechanical Interface

- Very similar interface
- Experiment mass and volume within capabilities

Electrical Interface

- Express Pallet: 28 V, 1000 Watts
- Hitchhiker: 28 V, 1600 Watts
- Experiment consumption: 135 Watts, peak

Data Interface

- Express Pallet: MIL-STD-1553B
- Shuttle H/H: RS 422 asynchronous

Thermal Design

Environmental temperature

- Difference in orbit inclination
- Express Pallet: -110 °C to + 40 °C
- Open Cargo Bay: -160 °C to + 95 °C

Thermal load

- Increase in laser power

Ground Sub-system Mods.

De-multiplexed Detection Process

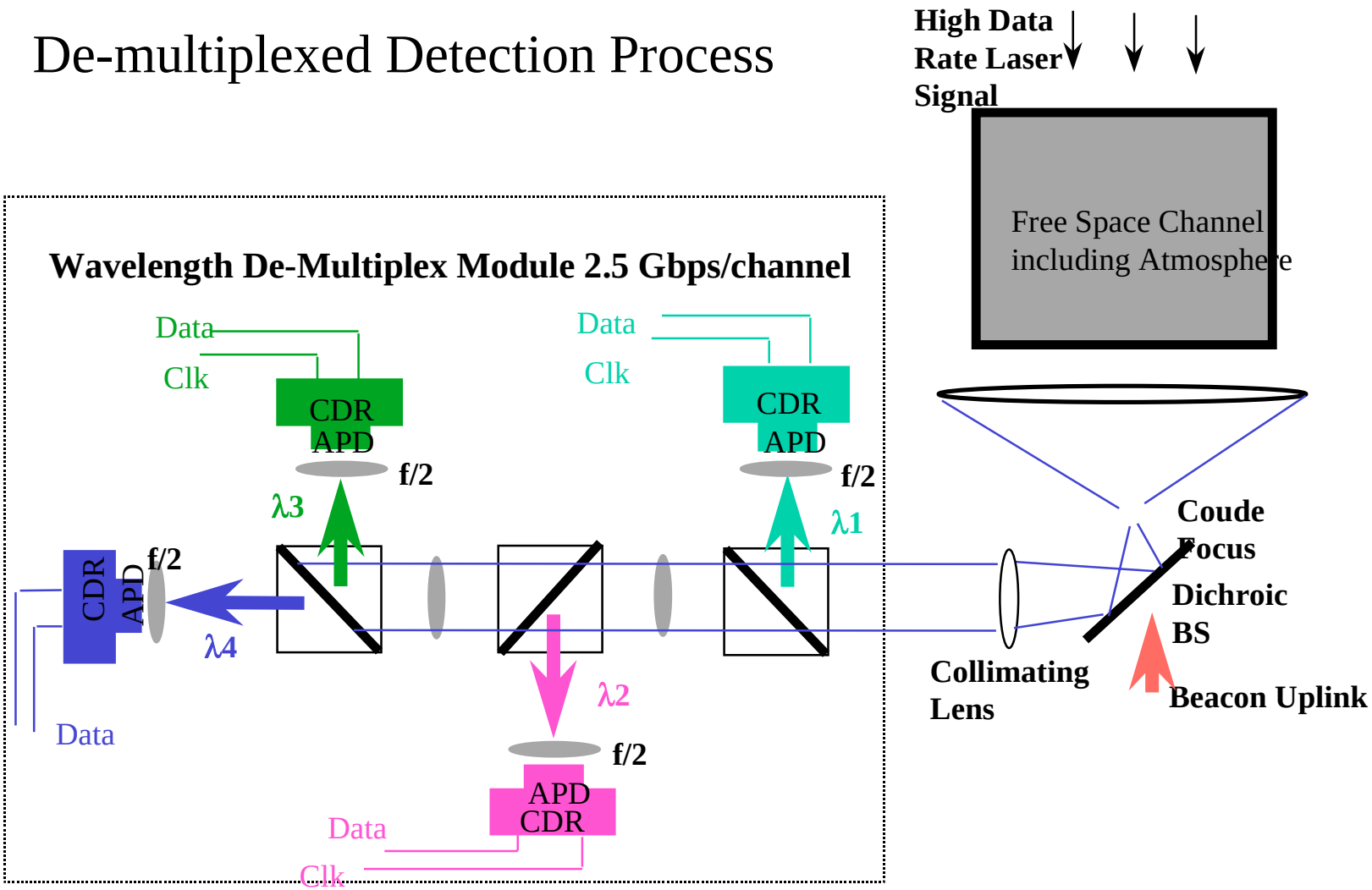

Summary

- Propose a 10 Gbps optical communications experiment for Shuttle Hitchhiker Cross-bay Carrier
- Builds upon existing programs and infrastructure
- Upgrade to Shuttle H/H 10 Gbps Experiment requires few changes from current OCDHRLF project
- Enhances NPOESS and other high data rate earth orbiters